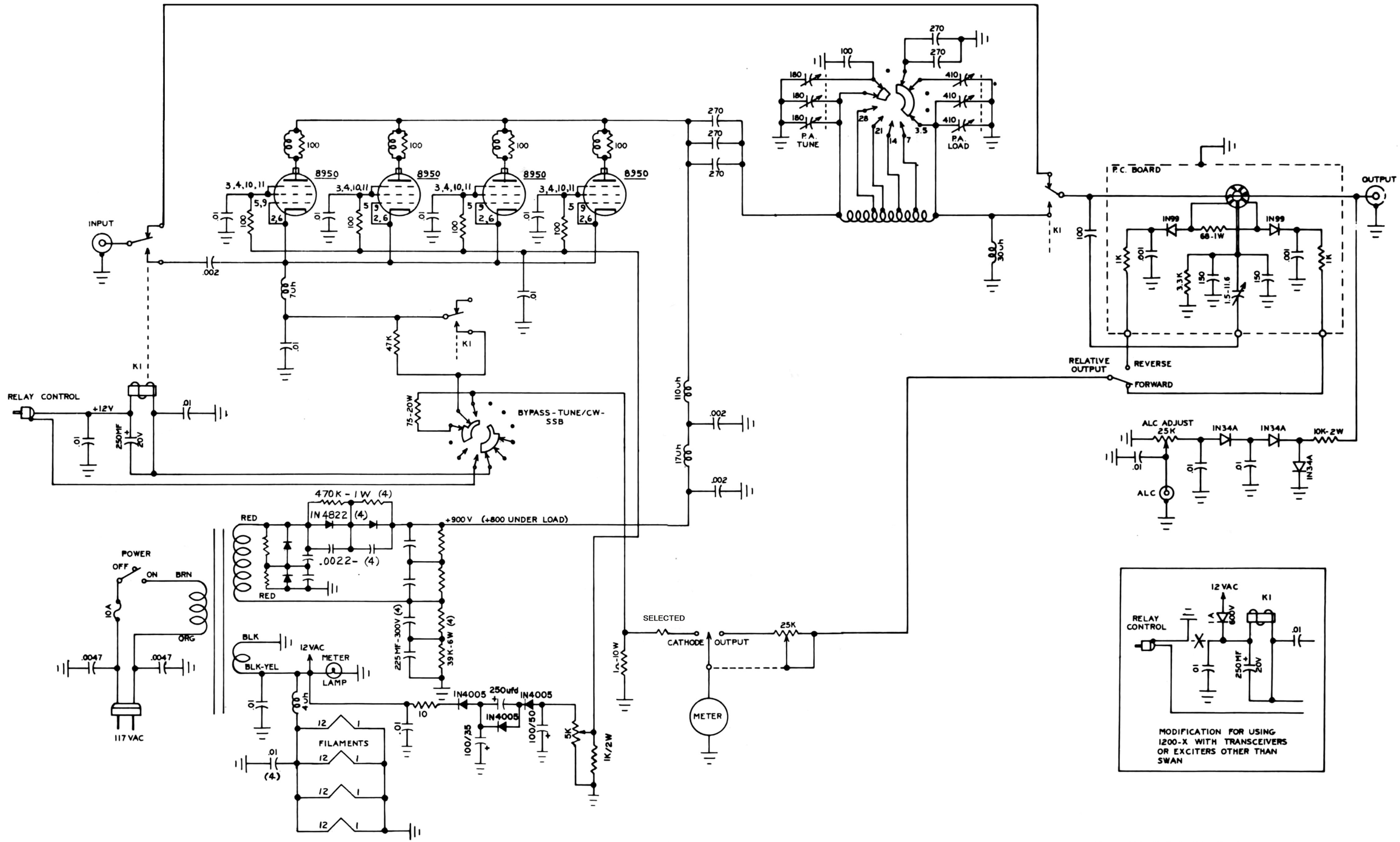

Swan Model 1200-X Cygnet Linear Amplifier Schematic Diagram